SUNTA

SUNTA MOTOR ELECTRIC LTD.

MODEL NO. 8025D*-*SERIES

Size: 80*80*25mm.
Motor: Brushless DC Motor
Motor protected: .polarity+over current shutdown protected. (OCP)
Frame(Houseing): PBT + 30% fiber glass black color UL94-0
Impeller: PBT + 30% fiber glass. Black color, UL94V-0.
Lead wire: 1007#26AWG. UL/CSA.
Insulation resistance: Min.10M Ohm at 500 VDC between terminal and the frame.
Dielectric Strength: 1 min at 800 VAC.50/60 HZ between lead wire (+) and frame.
Bearing type: B: 2 ball bearing. Sleeve bearing S: one Sleeve bearing
Operating Temp: Ball bearing: within-20~80 degree C
Sleeve bearing: within-10~56 degree C
Sleeve bearing: within -10~56 degree C
Life expectancy: Ball bearing: 50,000 hours at 60 degree C.
Sleeve bearing: 20,000 hours at 45 degree C.
Above measurements Tem. at: Within 20~30 degree C.
Above measurements humidity at: 65%+-15%.
Safety Approvals: CE
Net weight :
CONNECTOR: L: lead wire

MODEL NO.	RATED	RATED AMP	RATED RPM	VOLTAGE RATED VDC	MAX. AIR FLOW		MAX.AIR PRESSURE		NOISE
	VDC	A	RPM	VDC	CMM	CFM	MM/H2O	INCH/H2O	DBA
8025D1-HHBPL 8025D1-HHSPL	12	0.38	4000	6~13.8	1.52	54	7.87	0.31	40
8025D1-HBPL 8025D1-HSPL		0.16	3000		1.13	40	5.8	0.23	33
8025D1-MBPL 8025D1-MSPL		0.12	2500		0.910	32	4.0	0.16	28
8025D2HHBPL 8025D2-HHSPL	24	0.25	4000	12~28	1.52	54	7.87	0.31	40
8025D2-HBPL 8025D2-HSPL		0.12	3000		1.13	40	5.8	0.23	33
8025D4-HHBPL 8025D4-HHSPL	48	0.16	4500	36~56	1.69	60	8.89	0.35	43
8025D4-HBPL 8025D4-HSPL		0.08	3400		1.30	46	6.6	0.26	34

Remark :
- The above specification data are for reference only, general data tolerance ± 10%
- Ball Bearing types are 2 Ball Bearing
- Special design are requested available, please inform us now.
- Sunta reserves the right to change the data without notice.

Optional Function and Lead wire color
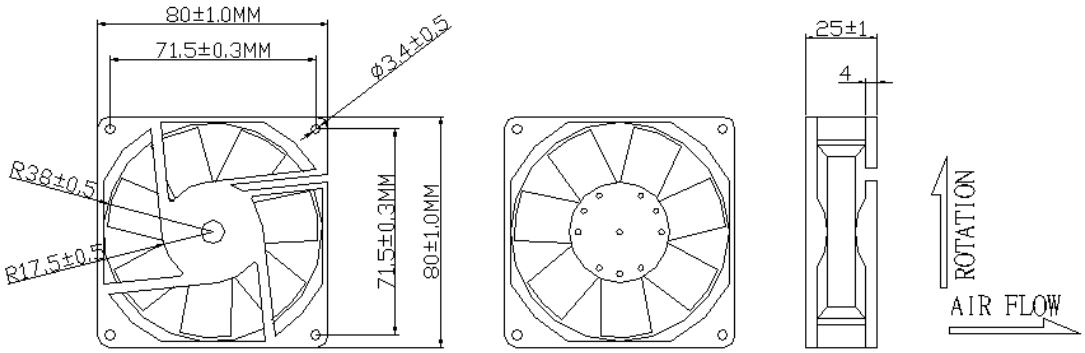
FG : Tachometer speed sensor output signal , open collector 2 square waves per revoluation , **lead wire color is white**
RD: Alarm output signal : (motor run-Low, motor stop-High), lead wire color is yellow.